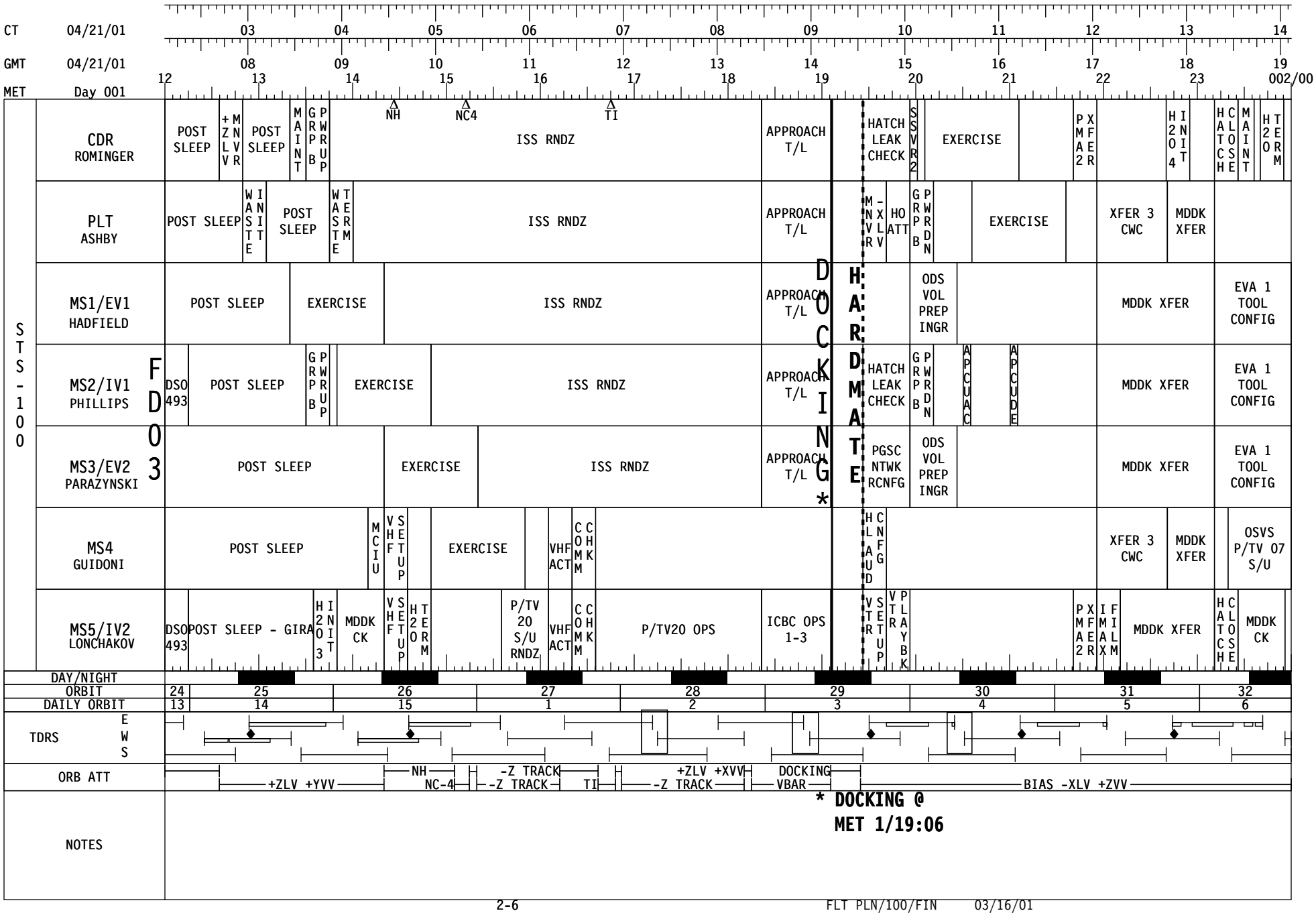
CT 04/21/01
GMT 04/21/01
MET Day 001
STS-100
CDR ROMINGER
POST SLEEP
+ZLV MNVR
POST SLEEP
MAINT
GRPB PWRUP
NH
NC4
TI
ISS RNDZ
APPROACH T/L
HATCH LEAK CHECK
SSVR2
EXERCISE
PMA2 XFER
H2O4 INIT
HATCH CLOSE
MAINT
H2O TERM
PLT ASHBY
POST SLEEP
WASTE INIT
POST SLEEP
WASTE TERM
ISS RNDZ
APPROACH T/L
MNVR -XLV
HO ATT
GRPB PWRDN
EXERCISE
XFER 3 CWC
MDDK XFER
MS1/EV1 HADFIELD
POST SLEEP
EXERCISE
ISS RNDZ
APPROACH T/L
ODS VOL PREP INGR
MDDK XFER
EVA 1 TOOL CONFIG
MS2/IV1 PHILLIPS
DSO 493
POST SLEEP
GRPB PWRUP
EXERCISE
ISS RNDZ
APPROACH T/L
HATCH LEAK CHECK
GRPB PWRDN
APCUAC
APCUDE
MDDK XFER
EVA 1 TOOL CONFIG
MS3/EV2 PARAZYNSKI
POST SLEEP
EXERCISE
ISS RNDZ
APPROACH T/L
PGSC NTWK RCNFG
ODS VOL PREP INGR
MDDK XFER
EVA 1 TOOL CONFIG
MS4 GUIDONI
POST SLEEP
MCIU
VHF SETUP
EXERCISE
VHF ACT
COMM CHKM
HLAUD CNFG
XFER 3 CWC
MDDK XFER
OSVS P/TV 07 S/U
MS5/IV2 LONCHAKOV
DSO 493
POST SLEEP - GIRA
H2O3 INIT
MDDK CK
VHF SETUP
H2O TERM
P/TV 20 S/U RNDZ
VHF ACT
COMM CHKM
P/TV20 OPS
ICBC OPS 1-3
VTR SETUP
VTR PLAYBK
PMA2 XFER
IMAX FILM
MDDK XFER
HATCH CLOSE
MDDK CK
FDO3
DOCKING*
HARDMATE
DAY/NIGHT
ORBIT 24 25 26 27 28 29 30 31 32
DAILY ORBIT 13 14 15 1 2 3 4 5 6
TDRS E W S
ORB ATT
+ZLV +YVV
NH
NC-4
-Z TRACK
-Z TRACK
TI
+ZLV +XVV
-Z TRACK
DOCKING
VBAR
BIAS -XLV +ZVV
NOTES
* DOCKING @
MET 1/19:06

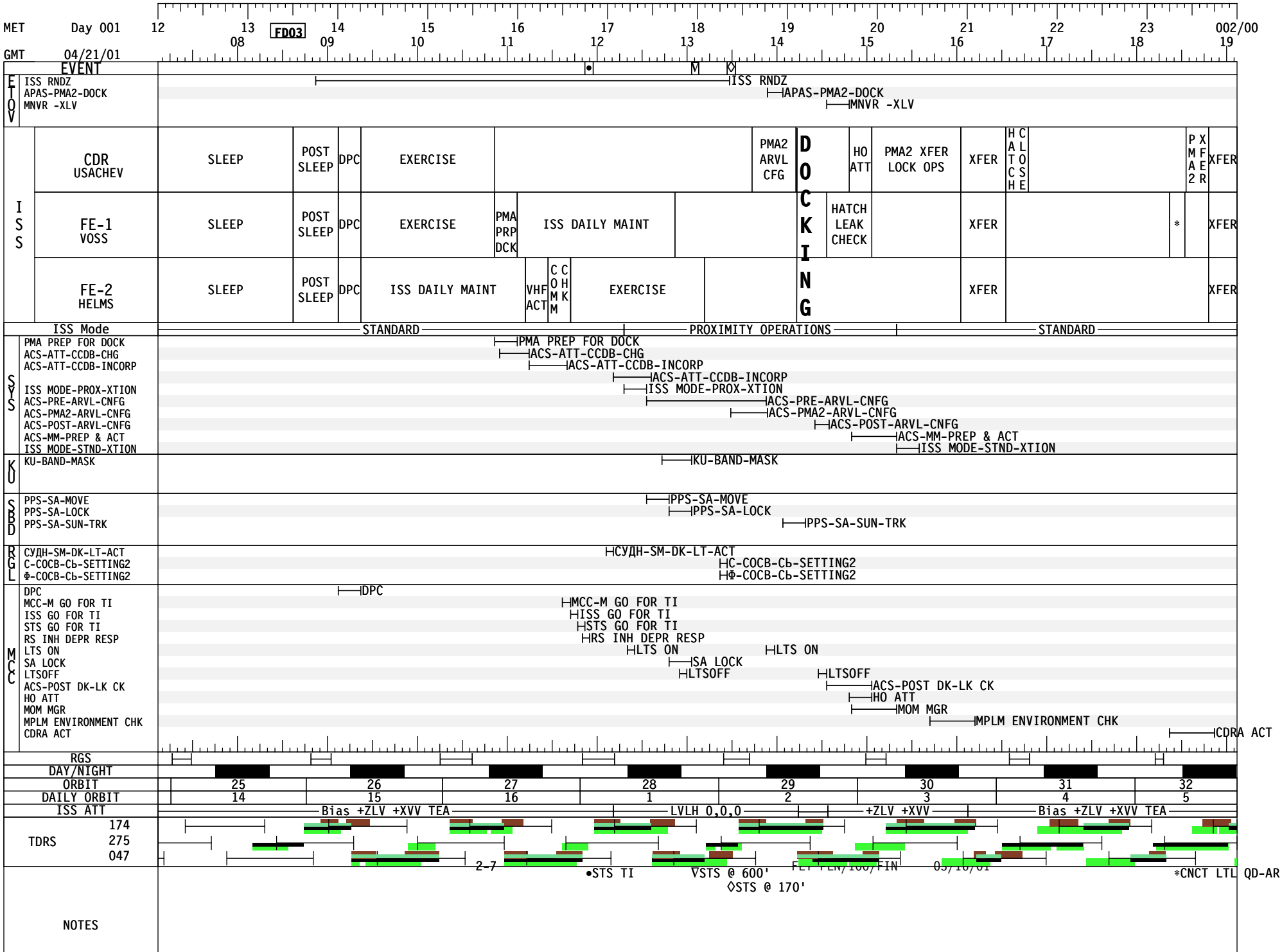
MET Day 001
GMT 04/21/01
FD03
12 13 14 15 16 17 18 19 20 21 22 23 002/00
08 09 10 11 12 13 14 15 16 17 18 19
EVENT
ETOV
ISS RNDZ
APAS-PMA2-DOCK
MNVR -XLV
ISS
CDR USACHEV
SLEEP
POST SLEEP
DPC
EXERCISE
PMA2 ARVL CFG
DOCKING
HO ATT
PMA2 XFER LOCK OPS
XFER
HATCH CLOSE
PMA2 XFER
FE-1 VOSS
PMA PRP DCK
ISS DAILY MAINT
HATCH LEAK CHECK
*
FE-2 HELMS
VHF ACT
COMM CHK
ISS Mode
STANDARD
PROXIMITY OPERATIONS
SYS
PMA PREP FOR DOCK
ACS-ATT-CCDB-CHG
ACS-ATT-CCDB-INCORP
ISS MODE-PROX-XTION
ACS-PRE-ARVL-CNFG
ACS-PMA2-ARVL-CNFG
ACS-POST-ARVL-CNFG
ACS-MM-PREP & ACT
ISS MODE-STND-XTION
KU
KU-BAND-MASK
SBD
PPS-SA-MOVE
PPS-SA-LOCK
PPS-SA-SUN-TRK
RGL
СУДН-SM-DK-LT-ACT
C-COCB-Cь-SETTING2
Ф-COCB-Cь-SETTING2
MCC
DPC
MCC-M GO FOR TI
ISS GO FOR TI
STS GO FOR TI
RS INH DEPR RESP
LTS ON
SA LOCK
LTSOFF
ACS-POST DK-LK CK
HO ATT
MOM MGR
MPLM ENVIRONMENT CHK
CDRA ACT
RGS
DAY/NIGHT
ORBIT 25 26 27 28 29 30 31 32
DAILY ORBIT 14 15 16 1 2 3 4 5
ISS ATT
Bias +ZLV +XVV TEA
LVLH 0,0,0
+ZLV +XVV
TDRS 174 275 047
•STS TI
∇STS @ 600'
◊STS @ 170'
*CNCT LTL QD-AR RA
NOTES

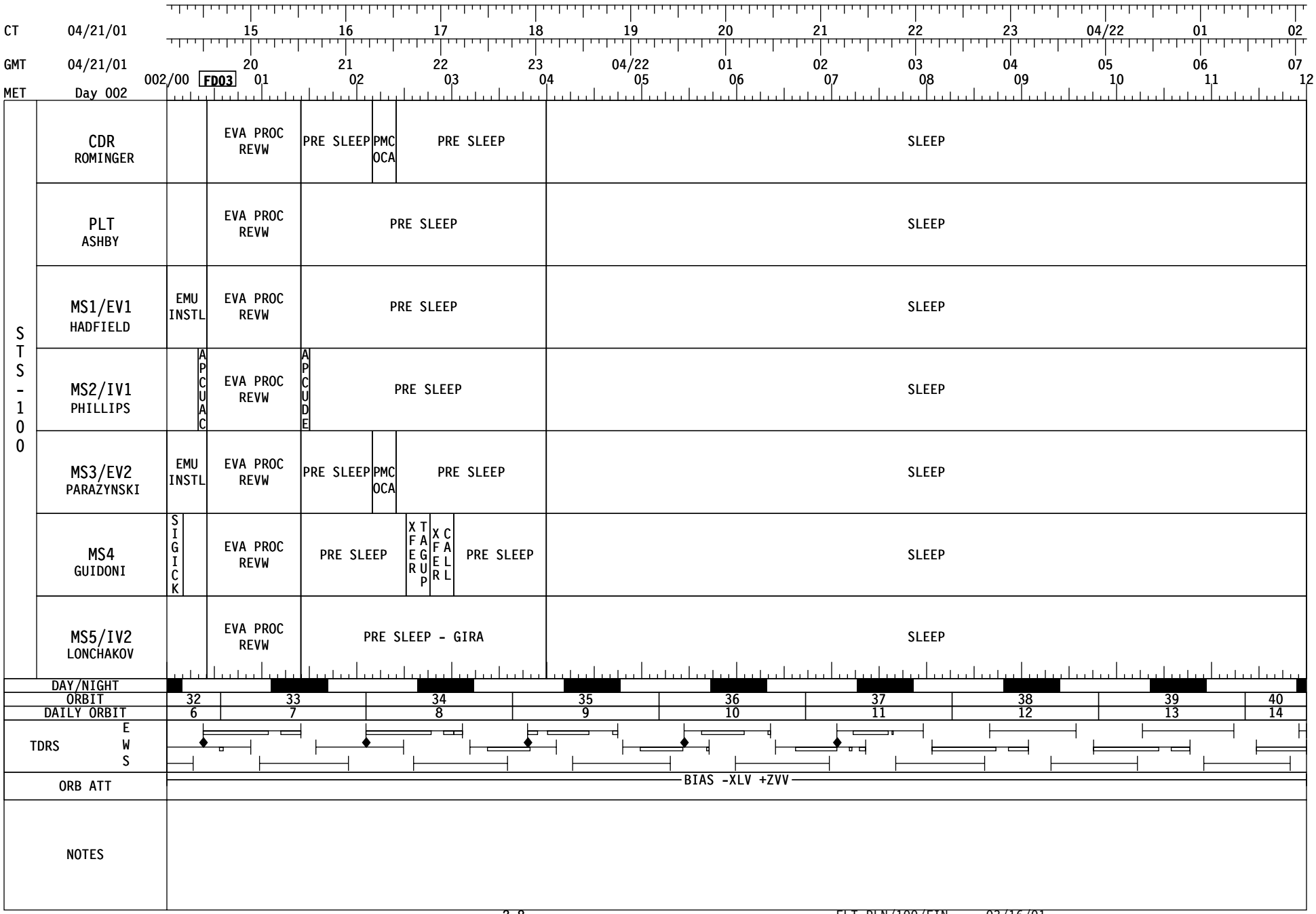
CT 04/21/01 15 16 17 18 19 20 21 22 23 04/22 01 02
GMT 04/21/01 20 21 22 23 04/22 01 02 03 04 05 06 07
MET Day 002 002/00 FD03 01 02 03 04 05 06 07 08 09 10 11 12
STS-100
CDR ROMINGER
EVA PROC REVW
PRE SLEEP
PMC OCA
PRE SLEEP
SLEEP
PLT ASHBY
EVA PROC REVW
PRE SLEEP
SLEEP
MS1/EV1 HADFIELD
EMU INSTL
EVA PROC REVW
PRE SLEEP
SLEEP
MS2/IV1 PHILLIPS
APCUAC
EVA PROC REVW
APCUDE
PRE SLEEP
SLEEP
MS3/EV2 PARAZYNSKI
EMU INSTL
EVA PROC REVW
PRE SLEEP
PMC OCA
PRE SLEEP
SLEEP
MS4 GUIDONI
SIGICK
EVA PROC REVW
PRE SLEEP
XFER
TAGUP
XFER
CALL
PRE SLEEP
SLEEP
MS5/IV2 LONCHAKOV
EVA PROC REVW
PRE SLEEP - GIRA
SLEEP
DAY/NIGHT
ORBIT 32 33 34 35 36 37 38 39 40
DAILY ORBIT 6 7 8 9 10 11 12 13 14
TDRS E W S
ORB ATT
BIAS -XLV +ZVV
NOTES

MET Day 002 002/00 FD03 01 02 03 04 05 06 07 08 09 10 11 12

GMT 04/21/01 20 21 22 23 04/22 01 02 03 04 05 06 07

EVENT

ETOV										
ISS	CDR USACHEV	XFER	EVA PROC REVW	XFER	HATCH / CLOSE		DAR	PRE-SLEEP	SLEEP	
	FE-1 VOSS	XFER	EVA PROC REVW	IMAX S/U LAB BRKT		XFER / TAGUP	DAR	PRE-SLEEP	SLEEP	
	FE-2 HELMS	XFER	EVA PROC REVW	XFER	RWS UOP IFM		DAR	PRE-SLEEP	SLEEP	
ISS Mode		STANDARD								
SYS										
KU										
SBD										
RGL										
MCC	MPLM ENVIRONMENT CHK	MPLM ENVIRONMENT CHK								
	DAR					DAR				
	MSS POWERUP									MSS POWER

RGS									
DAY/NIGHT									
ORBIT	32	33	34	35	36	37	38	39	40
DAILY ORBIT	5	6	7	8	9	10	11	12	13
ISS ATT	Bias +ZLV +XVV TEA								
TDRS 174									
TDRS 275									
TDRS 047									

NOTES