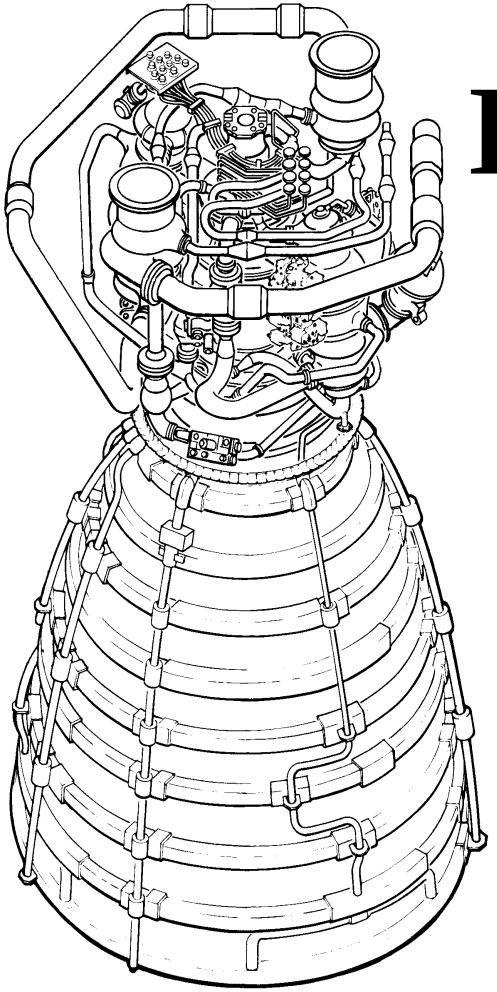

# Endeavour STS-111

## Space Shuttle Program

## SSME Flight Readiness Review

***May 16, 2002***

G. HOPSON
16 May 2002

# Endeavour STS-111

*Agenda*

- Major Components
- Engine Performance
- First Flight ECPs
- Special Topic
  - E2056 Contamination
  - LOX Flow C2 Constant Correction
- Material Review Reassessment

# Endeavour STS-111

*SSME Major Components*

| Engine | ME-1 / 2050 *Block II* | ME-2 / 2044 *Block II* | ME-3 / 2054 *Block II* |
|---|---|---|---|
| **Last Hot-Fire** | **STS-108** | **STS-105** | **STS-100** |
| **Powerhead** | 6006 | 6010 | 2036 |
| **Main Injector** | 2032 | 4029 | 6010 |
| **MCC** | 6023 | 6007 | 6019 |
| **Nozzle** | 5007 | 2035 | 2030 |
| **Controller** | F53 | F59 | F61 |
| **HPFTP** | 8017 | 8021R1 (1) | 8114 (1) |
| **LPFTP** | 6104 | 2232 | 4405 |
| **HPOTP** | 8025R1 | 8014R1 | 8017R1 |
| **LPOTP** | 2325 | 2229 | 6005 |

**(1) Changes after last hot-fire.**

# Endeavour STS-111

## *Predicted SSME Ignition Confirm Margins*

| Parameter | Margin Sigma | | |
|---|---|---|---|
| | ME-1 (2050) | ME-2 (2044) | ME-3 (2054) |
| HPFTP Minimum Speed | 4.2 | 5.6 | 5.6 |
| Min/Max Ignition Pc | 4.4 | 3.7 | 5.3 |
| Antiflood Valve Min Open | 22.6 | 27.0 | 25.0 |
| HPFTP Max Turbine Temp (1760 Limits) | 4.6 | 4.1 | 4.8 |
| HPOTP Max Turbine Temp (1460 Limits) | 6.0 | 5.0 | 6.6 |
| HPOTP Min Turbine Temp (720 Min @ 4.0 secs) | 7.7 | 7.0 | 7.5 |
| Preburner Max Purge Pressure (715/100 Limits) | 30.1 | 28.9 | 29.1 |
| POGO GOX Min/Max Pressure | 3.8 | 4.2 | 3.6 |

**[ ]** Less than 3 sigma margin

# Endeavour STS-111

## *Predicted SSME Performance at 104.5% P.L.*

| Parameter | ME-1 (2050) Sigma | ME-2 (2044) Sigma | ME-3 (2054) Sigma |
|---|---|---|---|
| HPFT Disch Temp A, Deg R | 0.3 | 0.9 | 0.1 |
| HPFT Disch Temp B, Deg R | -1.6 | -0.4 | -1.3 |
| HPOT Disch Temp A, Deg R | -0.8 | 2.0 | -0.7 |
| HPOT Disch Temp B, Deg R | -0.9 | 1.9 | 0.0 |
| HEX Interface Temp, Deg R | -1.3 | 1.7 | -1.3 |
| HPFTP Speed, rpm | -0.2 | 0.0 | 0.7 |
| LPFTP Speed, rpm | -0.7 | -0.9 | b **[-2.2]** |
| HPOTP Speed, rpm | 0.4 | -0.9 | c **[-2.2]** |
| LPOTP Speed, rpm | 0.4 | -0.6 | 0.6 |
| OPOV Position, % | -0.8 | a **[2.2]** | 0.4 |
| FPOV Position, % | -0.6 | -0.2 | -1.4 |
| PBP Disch Pressure, psia | 0.4 | 0.1 | -0.5 |
| HPFTP Disch Pressure, psia | -0.3 | 0.0 | -0.4 |
| HPOTP Disch Pressure, psia | 0.6 | -0.6 | -0.1 |
| | 8017<br>6104<br>8025R1<br>2325 | * 8021R1<br>2232<br>8014R1<br>2229 | * 8114<br>4405<br>8017R1<br>6005 |

* Change from last flight / acceptance test
[] Exceeds database two sigma
**a** Low performing HPOTP turbine coupled with OPOV oscillations
**b** Result of low LPFT performance
**c** High HPOTP head coefficient, consistent with engine history

# Endeavour STS-111

## *Predicted Redline Margins at 104.5% P.L.*

| Parameter | Margin Sigma | | |
|---|---|---|---|
| | ME-1 (2050) | ME-2 (2044) | ME-3 (2054) |
| HPFT Discharge Temp ChA, Deg R | 6.4 | 5.9 | 6.5 |
| HPFT Discharge Temp ChB, Deg R | 7.4 | 6.6 | 7.4 |
| HPOT Discharge Temp ChA, Deg R | 7.7 | 5.9 | 7.7 |
| HPOT Discharge Temp ChB, Deg R | 9.0 | 6.9 | 8.4 |
| HPOT Discharge Temp ChA, Deg R | 5.1 | 6.6 | 4.5 |
| HPOT Discharge Temp ChB, Deg R | 5.2 | 7.2 | 5.3 |
| HPOTP IMSL Purge Pr, psia | 7.7 | 6.8 | 7.0 |
| Low MCC Pc, psid | | | |
| Command-ChA Avg | 21.7 | 20.6 | 23.5 |
| Command-ChB Avg | 24.1 | 22.8 | 25.5 |
| FASCOS | | | |
| HPFTP (16 GRMS) | 8.7 | 8.2 | 8.7 |
| HPOTP (11 GRMS) | 34.2 | 33.5 | 35.3 |

# Endeavour STS-111

*SSME First Flight ECPs*

| ECP# | Description | Engines |
|---|---|---|
| 1328 | Hydraulic Actuator Stainless Steel Wireways | 2044 |
| 1380<br>1380R1<br>1401<br>1401R1 | Base Software Version Change - AC39 | ALL |

# Hydraulic Actuator Stainless Steel Wireways

*ECP 1328*

- **Issue**
  - Fabrication cost increasing.
- **Solution**
  - Develop a bent rigid wireway.
- **Certification Status**
  - Certification complete by analysis, and test .
    - 110 hotfire tests on 13 Actuators for 60,701 seconds
  - VCR approved - February 23, 2000

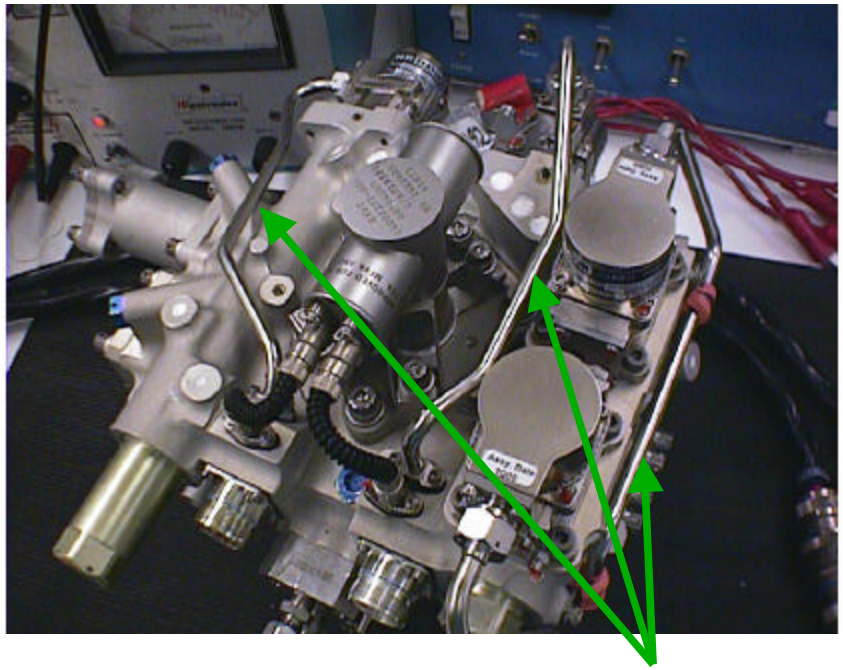

**New Wireways**

# Endeavour STS-111

## *ECPs 1380, 1380R1, 1401, 1401R1 - AC39 Software Version*

- **Background**
  - New Base Software Version AC39 (Last 14 Flights have used AC34)
  - AC39 = AC34 + ECPs 1380, 1380R1, 1401, 1401R1
- **ECP Descriptions**
  - ECP 1380 Incorporated over 100 SN fixes
  - ECP 1380R1 Revised Effectivity
  - ECP 1401 Incorporated 4 UCR condition corrections
  - ECP 1401R1 Incorporated 1 UCR condition correction
- **Verification and Certification Status**
  - Final Verification Completed at HSL on 3-12-02
  - VCR approved on 3-20-02
  - Hot-fire Experience
    - 4 Hot-fire tests on 2 Engines for 2,080 Seconds

# Endeavour STS-111

*Agenda*

- Major Components
- Engine Performance
- First Flight ECPs
- Special Topic
  - E2056 Contamination
  - LOX Flow C2 Constant Correction
- Material Review Reassessment

# Engine 2056 Contamination

- **Issue**
  - White contamination adhered to the walls of the preburner fuel supply duct
    - Discovered during normal inspections on Engine 2056
    - Subsequent inspections discovered additional contamination in the fuel system
- **Background**
  - Contamination findings prompted extensive inspections
  - Additional contamination identified
    - FPB & OPB - white contamination similar to duct contamination
    - HPFTP & LPFTP pump ends - white spots
    - Nozzle aft manifold - metallic weave type contamination (appears unrelated)

# Engine 2056 Contamination

- **Analysis**
  - Samples were retrieved from wall of preburner fuel supply duct
    - Well adhered with un-quantified thickness
    - Analysis of samples identified material as polyethylene
      - Polyethylene contamination appears to be smeared onto wall
        - Polyethylene used in a number of products including packaging bags, packaging foam
        - Materials investigation continuing to identify source

# Engine 2056 Contamination

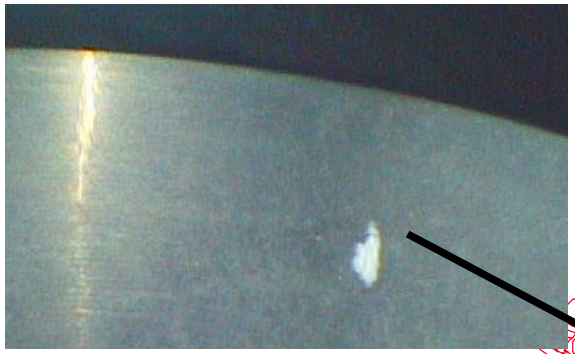

0.030 X 0.050”

Engine Powerhead

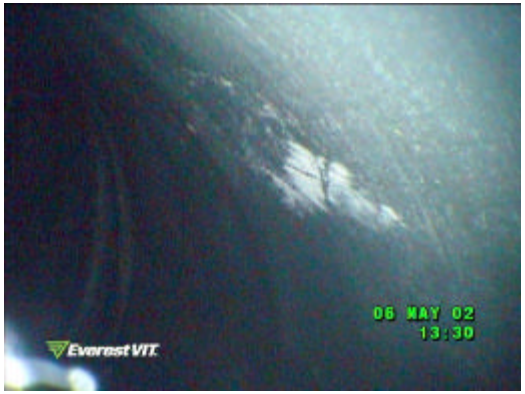


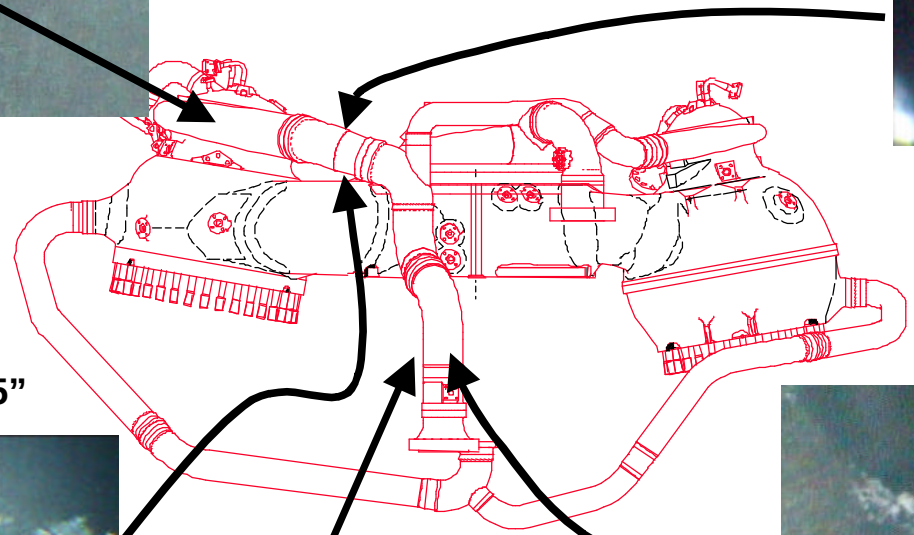

Max 0.075 X 0.075”

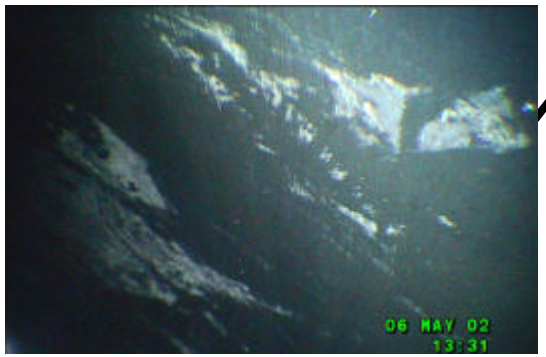


Preburner Fuel Supply Duct

Max 0.125 X 0.375”

# Engine 2056 Contamination

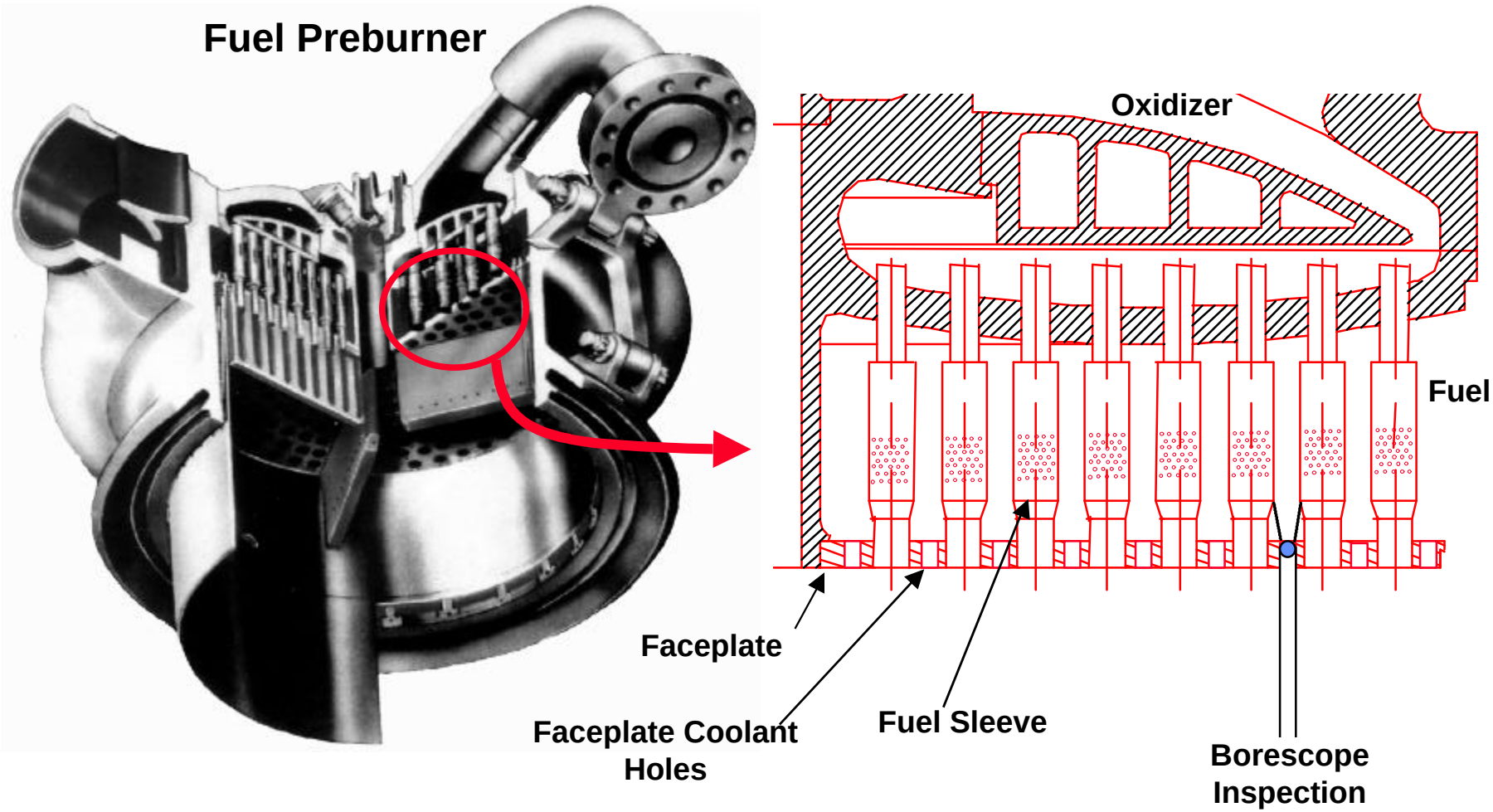

# Engine 2056 Contamination

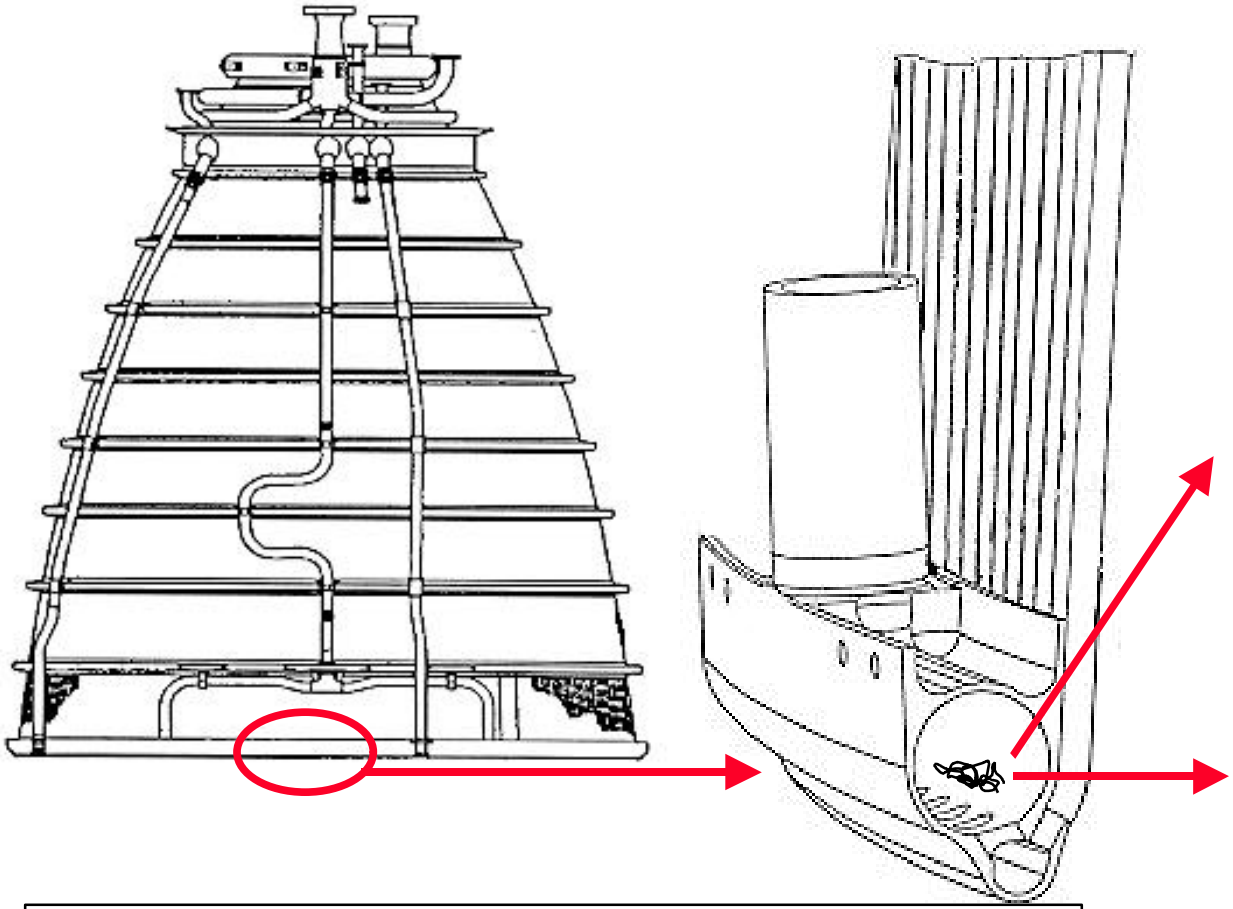

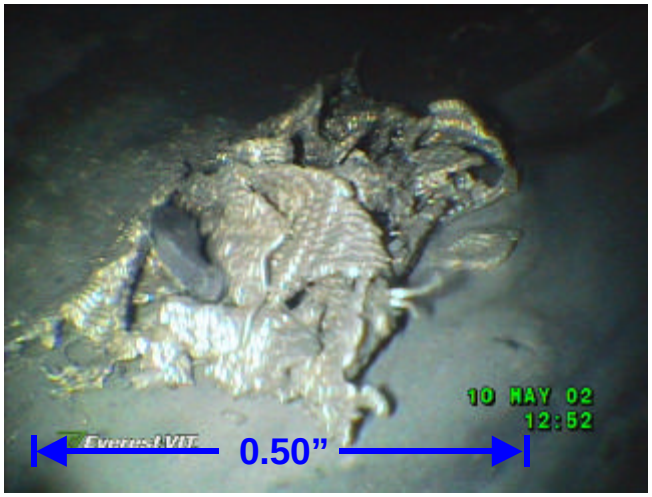


**Contamination well adhered and introduced during fabrication**

# Engine 2056 Contamination

- **Analysis**
  - Fuel Preburner - Majority of fuel flowrate
    - Fuel sleeve restriction
      - 0.014% of total fuel sleeve area restricted
      - 0.6 %  of single sleeve restricted
      - Requires greater than 40% of fuel sleeve holes blocked to cause a hot streak condition to damage fuel blades
    - Faceplate Coolant Holes
      - 8.6% restricted
      - Faceplate tolerant to complete coolant hole blockage
    - Data and post flight inspections found no discrepancies

# Engine 2056 Contamination

- **Analysis - continued**
  - Nozzle
    - Contamination well adhered
      - Introduced during the braze fabrication process
    - No Engine 2056 tube ruptures
    - No significant leakage history for STS-111 Nozzles

# Engine 2056 Contamination

- **Flight Rationale**
  - Engines are tolerant to contamination of this magnitude
    - E2056 operation not affected
  - All STS-111 engines have had similar inspections
    - No anomalies found
  - STS-111 engines have completed several tests and flights with no contamination related anomalies
    - Performance reviewed post-flight
    - Post-flight inspections completed

# Endeavour STS-111

*Agenda*

- Major Components
- Engine Performance
- First Flight ECPs
- Special Topic
  - E2056 Contamination
  - LOX Flow C2 Constant Correction
- Material Review Reassessment

# STS-111 Program Review

## *LOX Flow C2 Constant Correction*

- **Issue**
  - Engine “LOX flow” constant (C2) miscalculation resulted in slightly off nominal Mixture Ratio (MR)
- **Background**
  - -2 sigma MR estimated in post flight “reconstruction” for recent flights
    - Well within ICD requirements
  - C2 constants were changed starting with STS-108
    - Adjusts for MCC Pressure transducer calibration coefficient correction
  - Adjustment resulted in C2 miscalculation
    - Correction made in the opposite direction than intended
      - Compounds magnitude of MR effect
  - STS-111 C2 coefficients corrected
    - Independently verified
    - Correction brings prior three flights within the family
    - Will be loaded during normal T-19 hours process

# STS-111 Program Review

## *LOX Flow C2 Constant Correction*

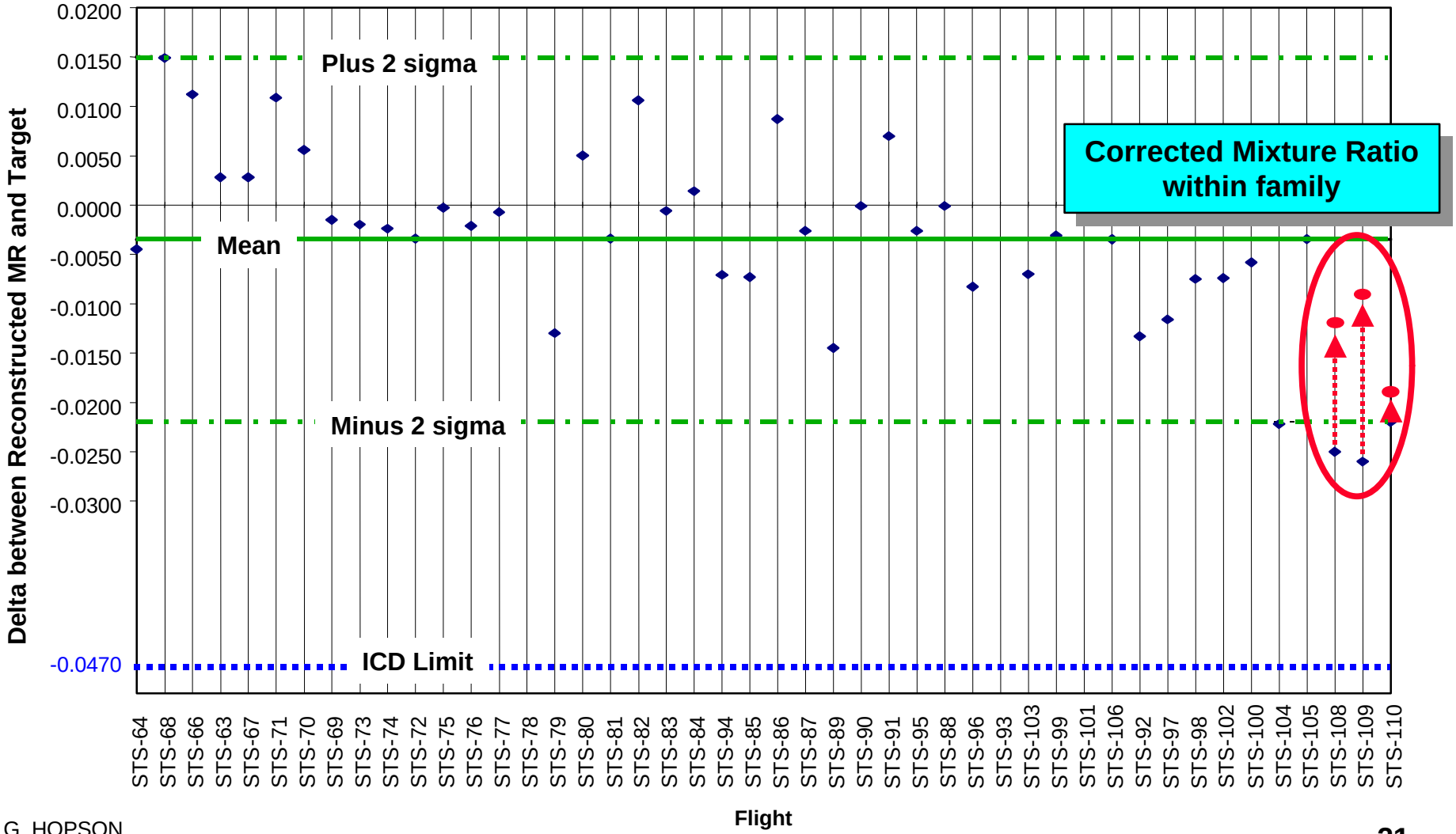

# STS-111 Program Review

## *LOX Flow C2 Constant Correction*

- **Rationale for flight**
  - STS-111 C2 coefficients corrected
    - Independently verified

# Endeavour STS-111

## *Material Review and Problem Report Reassessment*

- **All Material Reviews and Problem Reports Reassessed**
  - Encompasses entire part / component histories
    - Fabrication
    - Assembly
    - Test
    - Flight
    - Recycle
  - Verified proper dispositions in light of current program sensitivities, knowledge and experience

- **All dispositions evaluated and judged acceptable for flight**

# Endeavour STS-111

*SSME Certification of Flight Readiness*

- **Flight Readiness Review CoFR Exception**
  - Software Authorization Notice 0196R1 - C2 Coefficient Change

# Endeavour STS-111

*SSME Readiness Statement*

- **The Endeavour Main Engines are in a ready condition for STS-111**

**G.D. Hopson**
**Manager**
**SSME Project**

**J. S. Paulsen**
**Program Manager**
**Space Shuttle Main Engine**